Folding Windows & Doors

KOLBE® WINDOWS & DOORS

We're for the visionaries.™

We're for people who take building to new levels.

We're for people who are passionate about design, who care about the big picture and the smallest detail. We're for people who aren't satisfied with mainstream options. They push the limits of what's possible with the options, innovations and custom solutions that can only be found in Kolbe windows and doors.

We're for expertise.

We're for people who dream of a personalized design experience. That's why you can't find Kolbe windows and doors in the aisles of a home center. You can only purchase our products from a Kolbe dealer, because Kolbe dealers are as passionate about windows and doors as you are about bringing your vision to life.

Leave the details in the hands of a Kolbe window specialist. They'll work with you to make your dream a concrete reality.

We're for possibilities.

We're for people who don't want to compromise their vision to fit anyone else's idea of "standard." We're for handmade touches and virtually limitless options that can't be found within the aisles of a home center.

At Kolbe, each product is truly built to order. Our team members are craftsmen who focus on building one window or door at a time, so they can create custom-built products to fulfill your vision.

We're for quality craftsmanship.

We're for a tradition of excellence that outlasts the latest design fad. The Kolbe story began with a family and a vision. Almost 70 years after the Kolbe brothers began their commitment to producing premium quality windows and doors, products bearing their family name can be found in some of North America's most impressive homes.

We're for innovation.

We're for people who want to take building to new levels of performance, with advancements in not only extraordinary sizes and shapes, but also ground breaking products. We're for creative thinking that redefines what's possible.

Only Kolbe builds windows and doors that do the things you dream about. We're constantly reimagining our windows and doors to take building to new levels.

Let us bring your vision to life.

Photo courtesy of Darlene Halaby Photography

Table of Contents

Standard Features 4
Optional Features 5
Hardware Options 6
Glass & Divided Lite Options 7
Finish Options 8-9

Cross Section Drawings 10-18
- Ultra Series Clad Folding Windows 10-11
- Heritage Series Wood Folding Windows 12-13
- Ultra Series Clad Folding Doors 14-15
- Heritage Series Wood Folding Doors 16-17
- VistaLuxe® Complementary Folding Windows & Doors..... 18

Panel Configurations 19

Folding Windows & Doors

Add a scenic addition to your design project with Kolbe's folding windows and folding doors. Available as Heritage Series wood units, Ultra Series extruded aluminum clad units, or Vistaluxe® Complementary extruded aluminum clad units, these made-to-order windows and doors are available in expansive sizes and open up rooms dramatically by extending the living space to the outdoors. They are ideal for many applications, from new residential projects to commercial buildings.

Folding windows and folding doors are designed to provide not only attractive aesthetics, but also ease of operation and superior quality. Folding windows & folding doors have exceptional protection against air, water and structural forces – folding doors can meet a performance rating of DP-30 for standard units and DP-65 for High Performance units.* All folding window and folding door units are set up in a test wall before shipment, ensuring proper fit, operation and margins. If there are adjustments to be made on site, adjustment is easy and requires only an Allen wrench.

Attention to visual details gives folding windows and folding doors the same look as other Kolbe products, allowing for consistency throughout an entire project. VistaLuxe complementary folding windows and doors with square sticking match the clean crisp lines of other VistaLuxe Collection products. Many glass options, finish options and operational configurations make the possibilities nearly endless – contact your local Kolbe dealer to learn more about what folding windows and folding doors have to offer.

*Certain limitations and modifications apply. Contact your Kolbe dealer for more information.

Folding Windows & Doors Standard Features

- 1-3/4" thick sash
- 6-9/16" minimum jamb width
- Folding windows feature LVL locking stiles; stiles and rails are a nominal 3" wide
- Folding doors feature LVL locking stiles; stiles and top rails are a nominal 4-5/8" wide; bottom rail is a nominal 7-9/16" high
- Frame setup up to 177" wide x 106" tall; all others knocked down
- Constructed of pine with pine interior stops
- All exterior wood parts are preservative-treated
- Energy efficient, insulating LoE^2-270 glass *(tempered glass is standard on folding doors)*
- Glazed to the interior with beveled wood glazing beads for Heritage Series and Ultra Series products
- Glazed to the interior with square wood glazing beads for VistaLuxe complementary products
- On Ultra Series and VistaLuxe complementary units, .050" thick, 6063 extruded aluminum alloy frames are press fit onto the wood frame exterior, while sash exterior is covered with .063" thick, 6063 extruded aluminum alloy
- 70% PVDF fluoropolymer finish on frame and sash exteriors of Ultra Series and VistaLuxe Complementary units *(meets performance requirements of AAMA 2605)*
- Accessory grooves are integral to the extruded frames for the easy addition of accessories on Ultra Series units and easy mulling on VistaLuxe Complementary units
- Frame corners of Ultra Series and VistaLuxe complementary units are mitered or profile cut, with internal corner and end keys screwed into the joints and injected with silicone sealant
- Fully weatherstripped for a tight seal
- Bronze weep sill
- Grooved guide rollers with adjustable, ball-bearing wheels carry the folding panels
- Multi-point* mortise latch with handle set in a Bright Brass finish for access panel or access door
- Face-mounted flush bolt locking hardware on folding panels
- Thick oak interior threshold
- Heavy vinyl nailing fins with head drip caps†

NOTES: All measurements are nominal.
For folding windows, minimum panel height is 36", minimum panel width is 16", maximum panel height is 72" and maximum panel width is 39-3/8".
For folding doors, minimum panel height is 72", minimum panel width is 23-3/4", maximum panel height is 120" and maximum panel width is 39-3/8".
* Minimum panel height for multi-point hardware is 36".
† Standard only on units without brickmould.

Photo courtesy of Darlene Halaby Photography

Folding Windows & Doors Optional Features

Glass *(pg. 7)*:

- LoE-180
- LoE²-240
- LoE³-366
- ThermaPlus™ LoE
- Neat®
- Triple pane**
- Patterned-, bronze- or gray-lite
- Laminated or tempered *(tempered glass is standard on folding doors)*
- Other options standard to the industry

Divided Lites *(pg. 7)*:

- Performance divided lites with 5/8", 7/8", 1-1/8", 1-3/4", 2-1/4", or 4-1/2" bars
- True divided lites with 5/8" LoE² insulating glass and 1-1/8" bars *(Heritage Series only)*
- Grilles-in-the-airspace
- Interior removable wood grilles with 7/8" or 1-1/8" bars and full surrounds *(Heritage Series & Ultra Series only)*
- Beveled, ovolo or square profile interior grille bars *(only square profile is available on VistaLuxe Complementary units)*

Other Options: *(custom options are also available)*

- Folding window stile and top rail options: 4-5/8" or 6"
- Folding window bottom rail options: 4-5/8", 6", 7-9/16" or 12-5/8"
- Folding door stile and top rail options: 3"†† or 6"
- Folding door bottom rail options: 4-5/8", 6" or 12-5/8"
- 2-1/4" thick panel
- Other wood species and FSC-certified wood *(pg. 8)*
- Interior prefinishing *(pg. 8)*
- Interior casing
- Ovolo or square profile glazing beads *(square is standard on VistaLuxe complementary products)*
- Single-point hardware for access panel or access door
- Black pleated sliding screens available up to 177" wide x 102" tall *(screen opening size; screen only available on units with the frame setup)*
- Screen frames available in Dark Brown as standard or White as an option
- K-Kron II high performance exterior finish for Heritage Series units
- Exterior brickmoulds and casings for Heritage Series units
- Extruded aluminum accessories applied to accessory grooves on the exterior frame of Ultra Series units
- Toronto, München, Verona, or Dallas handle set for access panel or access door *(pg.6)*
- Concealed shootbolt locking hardware for folding panels *(pg. 6)*
- Uno or Aria handle set for folding panels with concealed shoot bolts *(pg. 6)*
- Magnetic latch available to assist in keeping windows and doors stationary while open *(pg. 6)*
- Recessed floor track sill (interior), weep or non-weep in Bronze Anodized finish
- Recessed weep sill, Bronze Anodized finish
- Weep sill, Clear Anodized finish
- Extension jambs in a wide variety of sizes *(shipped loose for field application if over 12")*
- Galvanized steel installation clips

NOTES:

LoE²-240, LoE²-270, LoE³-366, Neat and Preserve are trademarks of Cardinal IG.

** 2-1/4" panels only; size limitations apply. Contact your Kolbe dealer for more information.

†† When folding doors are ordered with 3" stiles and panel size is larger than 8', panel thickness must be 2-1/4".

Hardware Options

Handles for Swinging Panel or Door

Folding windows can have a swinging panel, while folding doors can have a swinging door, for easy access. The swinging panel or door features a Toronto handle set as standard; other optional handle styles include München, Verona and Dallas. Swinging panel or swinging door hardware is available in Bright Brass *(standard)*, Antique Brass, Satin Nickel, Antique Nickel, Oil-Rubbed*, Rustic Umber and Matte Black. Both the swinging panel and the swinging door are available with single-point or multi-point** locking hardware.

* The oil-rubbed finish is a living finish, which means it will change appearance over time with use.
** Certain size minimums apply for multi-point locking hardware. Contact your Kolbe dealer for more information.

Toronto style handle
(shown in Antique Brass)

München style handle
(shown in Antique Nickel)

Verona style handle
(shown in Matte Black)

Dallas style handle
(shown in Satin Nickel)

Lock Bolts for Folding Panels

Flush Bolt

As standard, folding panels have surface-mounted flush bolts factory-applied. Sizes available include 7-1/2", 17-23/32", 23-5/8" or 39". *(shown in Matte Black; also available in Bright Brass, Chrome and Satin Nickel)*

Concealed Shoot Bolt

Folding panels with concealed shoot bolts are available with an Uno or Aria handle set *(below)*.

Handles for Folding Panels with Concealed Shoot Bolts

Folding panels with concealed shoot bolts are available with handles in two styles, Uno and Aria. Uno handles are available in Dull (Brushed) Chrome *(shown at right)* and Matte Black. Aria handles are available in Bright Brass, Chrome, Dull (Brushed) Chrome *(shown at right)* and Matte Black.

Finger Pulls for Folding Panels

When panels are configured such that the final panel does not have a hinge handle to pull in the panel, a finger pull can be installed so that the panel can be pulled in and secured. Finger pulls are available in Bright Brass, Chrome, Satin Nickel *(shown at right)* and Matte Black.

Magnetic Latch for Folding Panels

When panels are in an open position, some movement can occur due to wind or other factors. When magnetic latches are attached to the panel, the panels remain stationary. The purpose of this latch is to prevent movement, thereby keeping the panels in a fully open position.

NOTE: Hinge color options for folding windows and folding doors include Bright Brass, Chrome, Satin Nickel and Matte Black.

Glass & Divided Lite Options

Glass Options

LoE-180

When the weather turns frigid, LoE-180 glass is the perfect cold remedy. It keeps homes warmer and more comfortable by blocking heat loss to the outside and letting the sun's heat stream in to increase solar heat gain.

LoE²-240

Wherever glare is a problem, LoE²-240 glass is a solution to maintain year-round comfort in warmer climates. In summer, it blocks oppressive solar heat gain and maintains cool glass temperatures. When winter rolls around, it keeps inside glass temperatures warm.

LoE²-270

LoE²-270 glass delivers year-round comfort in most types of weather. Offering a balance of high clarity and low solar heat gain, LoE²-270 is standard in most Kolbe products. In summer, it rejects the sun's heat and damaging UV rays. In winter, it reflects heat back into the room.

LoE³-366

For warm climates, LoE³-366 delivers a balance of solar control and high visibility. This coating helps provide protection of fading, blocking up to 95% of the sun's damaging rays.

ThermaPlus LoE

ThermaPlus LoE is an additional interior coating applied to help meet the strictest energy requirements and provide protection against heat loss and UV damage.

Triple-Pane Glass

Triple-pane glass provides a greater energy performing window that keeps indoor air warm and comfortable, prevents heat loss and lowers your heating bills. Available with a variety of LoE coatings that best suit your needs.

NOTE: Not all glass is available on all series. Please contact your Kolbe dealer for specifics.

LoE-180, LoE²-240, LoE²-270, LoE³-366, Neat and Preserve are trademarks of Cardinal IG.

LoE insulating glass with a stainless steel spacer bar carries a 20-year warranty. Not all glass options listed have the same glass warranty. Please contact your dealer for details.

Mountain Air Energy Package

Specifically designed to meet a U-factor of .30 without argon gas. Consists of a specially-constructed frame, second-generation ThermaPlus glass with LoE³-366 and a capillary/breather tube within the insulating glass unit. Available on Crank-Out Casements and Awnings, Sterling Double Hungs, and Studio/Picture, Transom and Direct Set units to match Crank-Out Casements and Sterling Double Hungs.

Preserve

A protective film that protects the glass surfaces from scratches during transit and construction, as well as reducing the time involved in job site clean-up.

Tinted, Colored or Patterned

Provides shading, privacy or visual interest.

Finely Crafted Glass *(not available with argon gas)*

Decorative glass created with a variety of caming options.

Tempered

Standard in Kolbe doors to address safety concerns. Also available in window units to meet specific building codes.

Laminated

Benefits include safety, security, sound control and providing the ultimate in UV blockage.

Impact

Glazing utilized to withstand harsh environmental conditions, especially in coastal regions. Combined with an impact product, such as K-Force®, this product offers the highest level of security.

Neat®

Harnesses the sun's UV rays to loosen dirt so water can rinse it away, leaving windows virtually spotless. A special sputter-coating process makes the exterior glass surface ultra smooth, so the water "sheets off" more readily than it would on uncoated glass, allowing you to spend less time cleaning.

Divided Lite Options

Performance Divided Lites

Kolbe's performance divided lite (PDL) glazing system gives the appearance of true divided lites without sacrificing energy efficiency. Extruded aluminum bars are adhered to the exterior and wood bars to the interior of the single lite of insulating glass. Aesthetically-pleasing spacer bars are installed within the insulating glass unit. Together, these bars create the illusion of true divided lites.

True Divided Lites

True divided lites (TDL) give each unit a traditional look. Units with TDL are comprised of wood muntin bars in between individual glass panels. The exterior finish on the bars will match the exterior finish of the unit. Depending on glass options choosen, standard bar widths are available in 7/8" or 1-1/8". TDL glass units are not argon gas filled.

Also available: Grilles-in-the-airspace & removable wood grilles.

Finish Options

Interior Wood Species

Most of our wood windows and doors are built from pine as standard, but we often craft windows and doors from other wood species. Our wood species, including Mahogany, are sourced from managed forests. If a special wood species will enhance the beauty of your project, we'll do our best to achieve your vision. FSC®-certified wood species are also available for green building projects (FSC license code FSC-C019541).

* Sourced from companies such as Lamboo, Inc.

Interior Finish Options

For units that are ready to install upon delivery, Kolbe's wood windows and doors can be prefinished on the interior with one of the water-based stains or paints shown. Stained units are given two coats of satin finish clear sealer. Because our interior finishes are water-based, low-VOC stains and paints, you can rest assured you've made an environmentally conscious decision. Custom colors are also available.

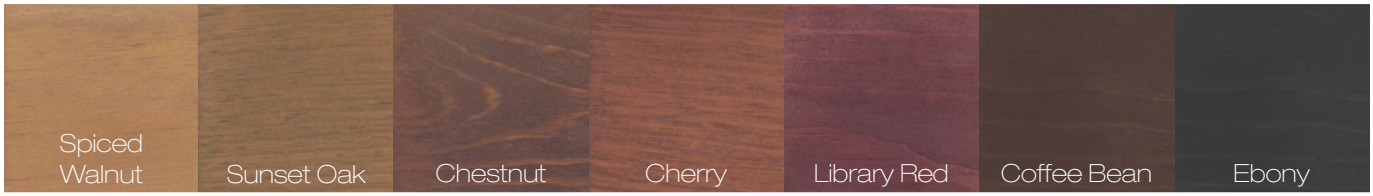

Printed images of wood species and stain options will vary from actual product colors. Selections should be made based on color samples available from your Kolbe dealer.

Stain colors are shown on pine. A double coat clear finish is also offered. Since no two trees are identical, wood can be expected to differ both in color and graining. These factors will influence the stain's final color.

Exterior Finish Options

Kolbe's ***Ultra Series*** clad and ***VistaLuxe Complementary*** clad folding windows and doors are finished on the exterior with a commercial-grade, 70% PVDF fluoropolymer coating that meets the requirements of AAMA 2605 specifications – the highest level in the industry. This finish carries up to a 30-year warranty, and many color options (as well as custom colors) are available for design flexibility. Mica fluoropolymer finishes, as well as a variety of unique, anodized exterior finishes, are also available for Ultra Series and VistaLuxe Complementary folding windows and doors. Kolbe's ***Heritage Series*** folding windows and doors can be coated on the exterior with K-Kron II, our exterior paint finish that offers a way to enhance and preserve the look of wood windows and doors. K-Kron II carries a 10-year warranty to help resist chalking, chemical attack, as well as damage from salt, wind, sleet and snow.

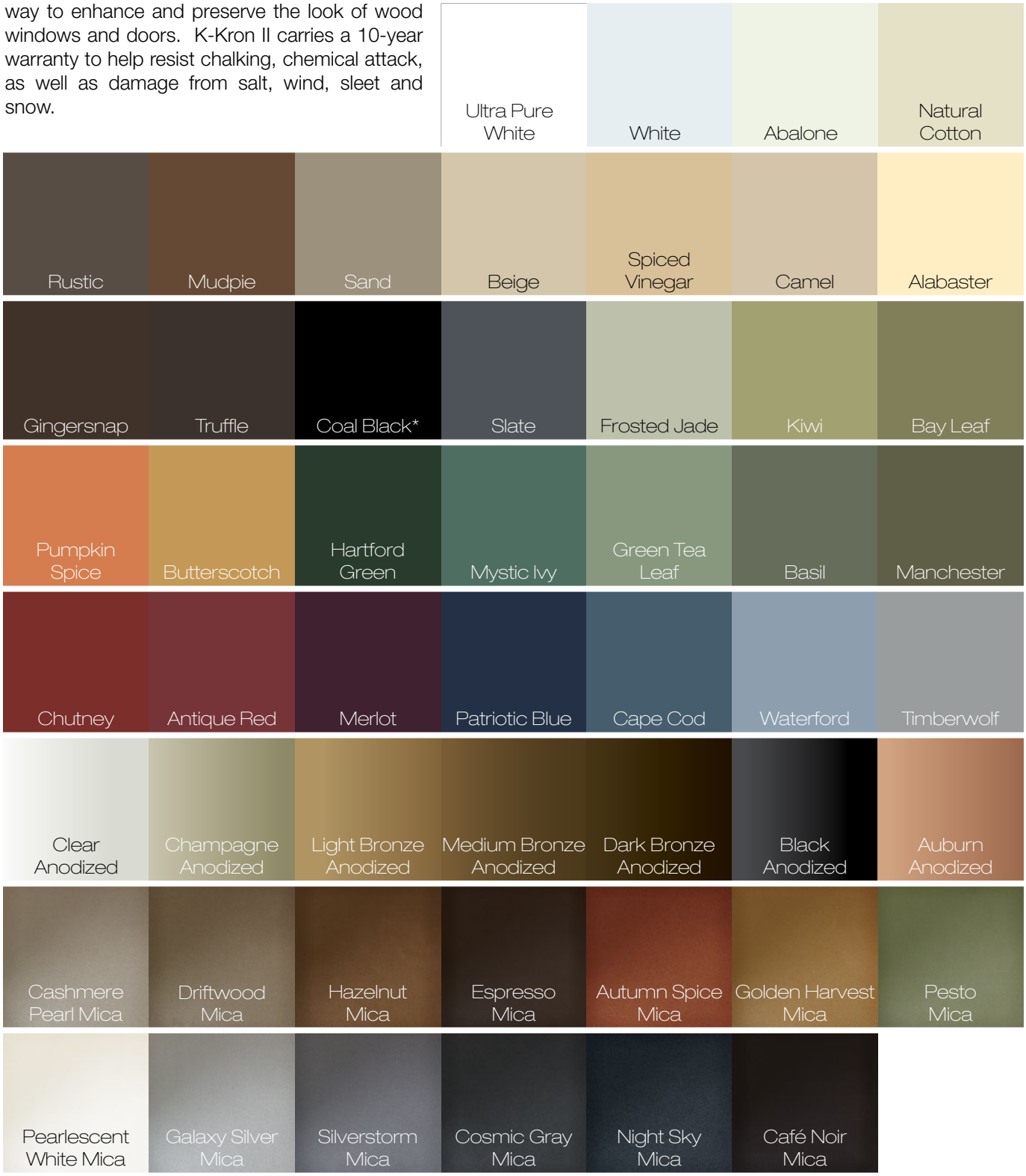

* Coal Black is not available for Heritage Series wood products.

Printed images of exterior finishes may vary slightly from actual colors. Selections should be made based on actual color samples available from your Kolbe dealer.

There is a "color range" with anodized colors. That is, there is an acceptable "light" to "dark" color range that can be experienced on any job. According to AAMA 611-98 specifications, Section 8.3, the range may be up to 5 Delta E's. We can provide from our anodized vendor color samples of this color range if requested. The color range is due to numerous variables which include (but are not limited to) the shape of the parts, alloy variations and time in the anodizing process. This could mean that a sash part may appear slightly different in color than a frame part. This is/will be acceptable. Even the samples that may be provided may vary from the final product due to the variables. You must be aware of this as this will be considered acceptable.

Cross Section Drawings

Ultra Series Clad Folding Windows

Four-Wide: Folding One-Way

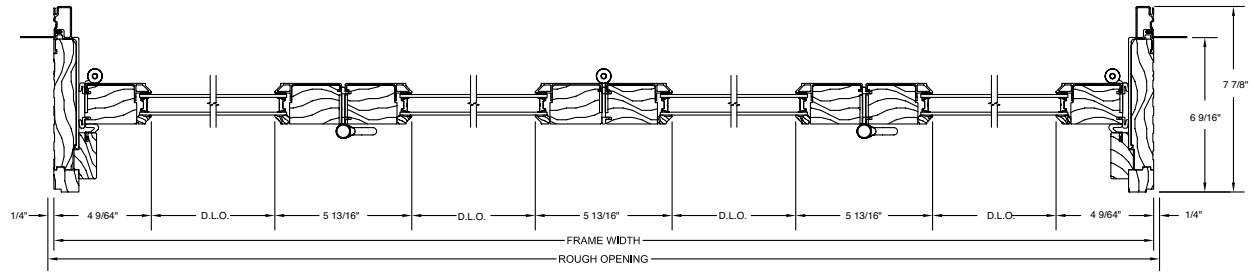

Four-Wide: One Left & Three Right

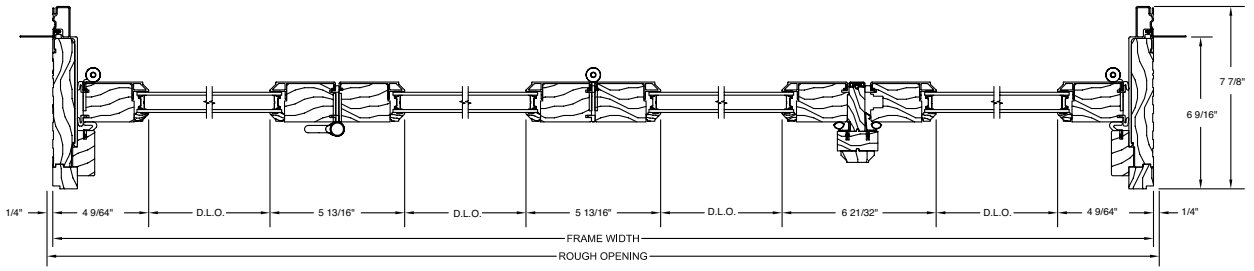

Four-Wide: Two Left & Two Right

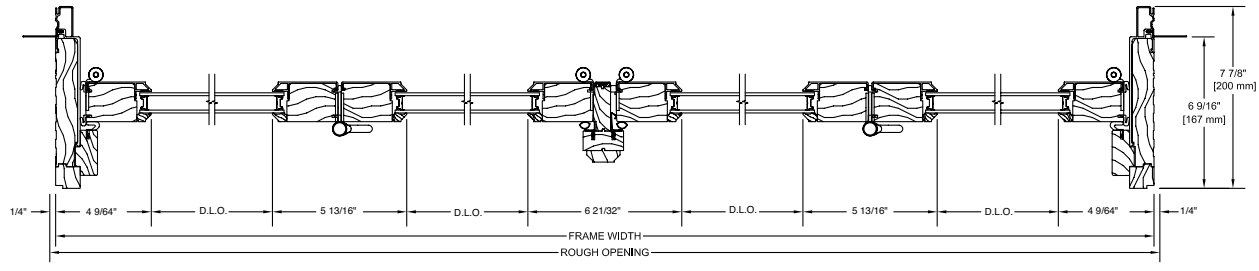

Operation is viewed from the exterior.

NOTE: Drawings are not to scale. Additional and the most current drawings are available in the Architect Library at www.kolbe-kolbe.com.

Ultra Series Clad Folding Windows

Corner Unit

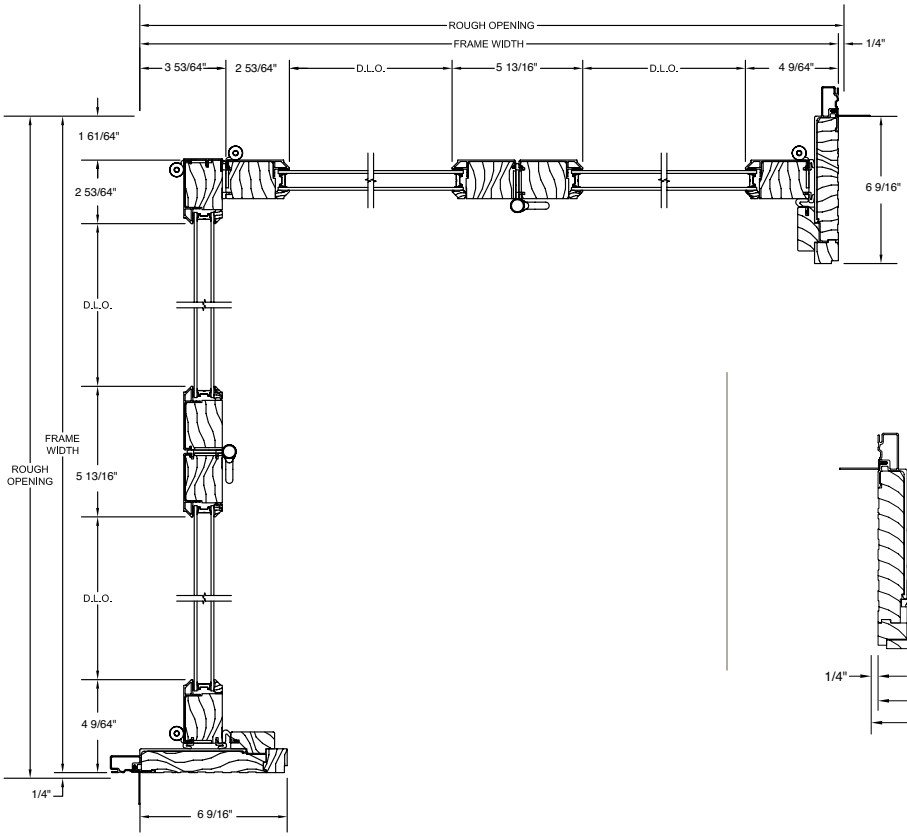

One Wide with Screen

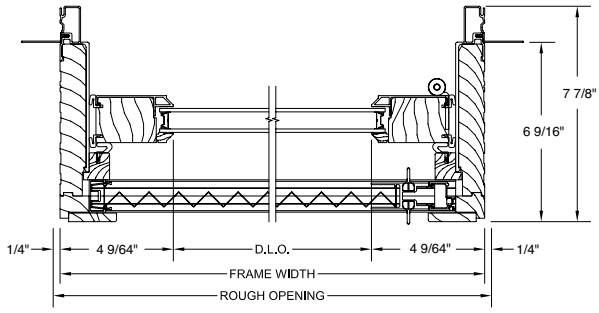

1.75 Panel with Recessed Sill

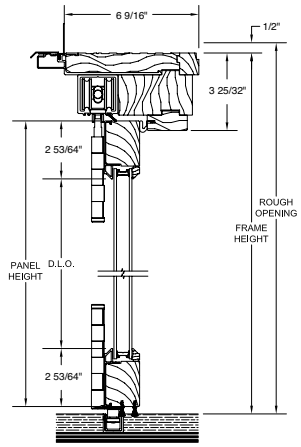

1.75 Panel with Weep Sill

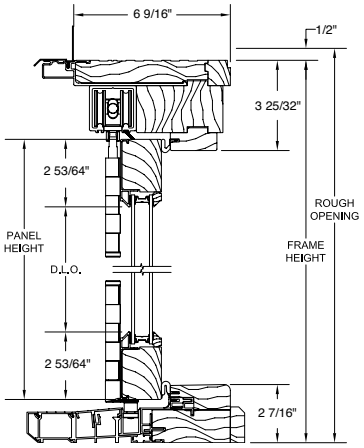

1.75 Panel with Weep Sill and Screen

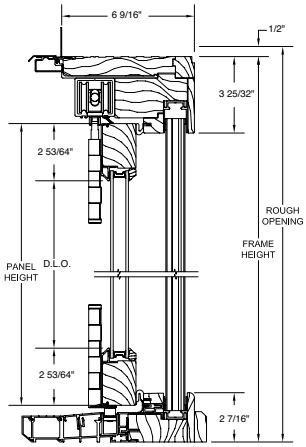

NOTE: Drawings are not to scale. Additional and the most current drawings are available in the Architect Library at www.kolbe-kolbe.com. Corner unit cross section will change when an odd number of panels are used.

Cross Section Drawings

Heritage Series Wood Folding Windows

Four-Wide: Folding One-Way

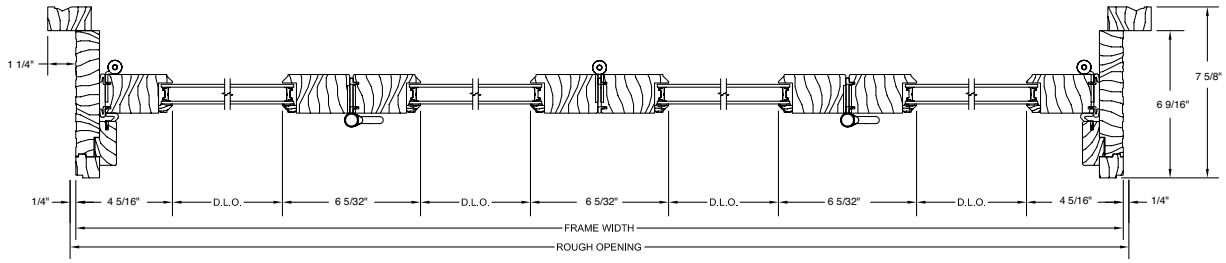

Four-Wide: One Left & Three Right

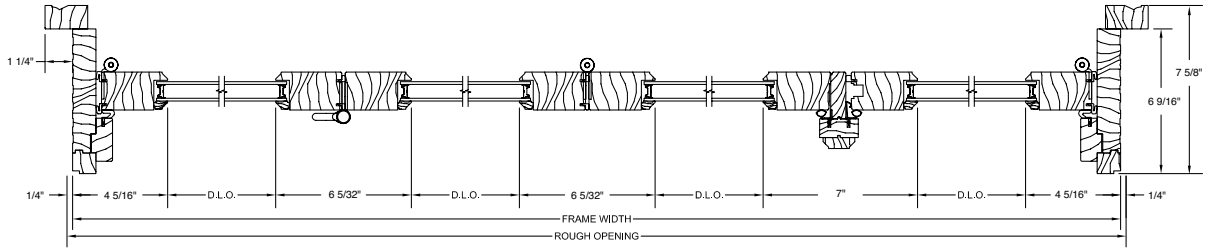

Four-Wide: Two Left & Two Right

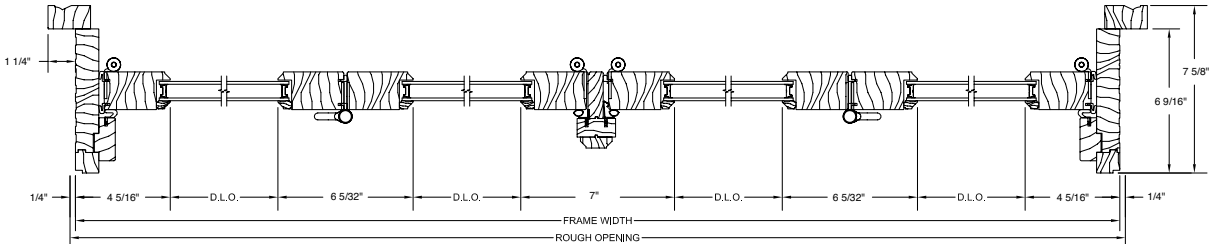

Operation is viewed from the exterior.

NOTE: Drawings are not to scale. Additional and the most current drawings are available in the Architect Library at www.kolbe-kolbe.com.

Heritage Series Wood Folding Windows

Corner Unit

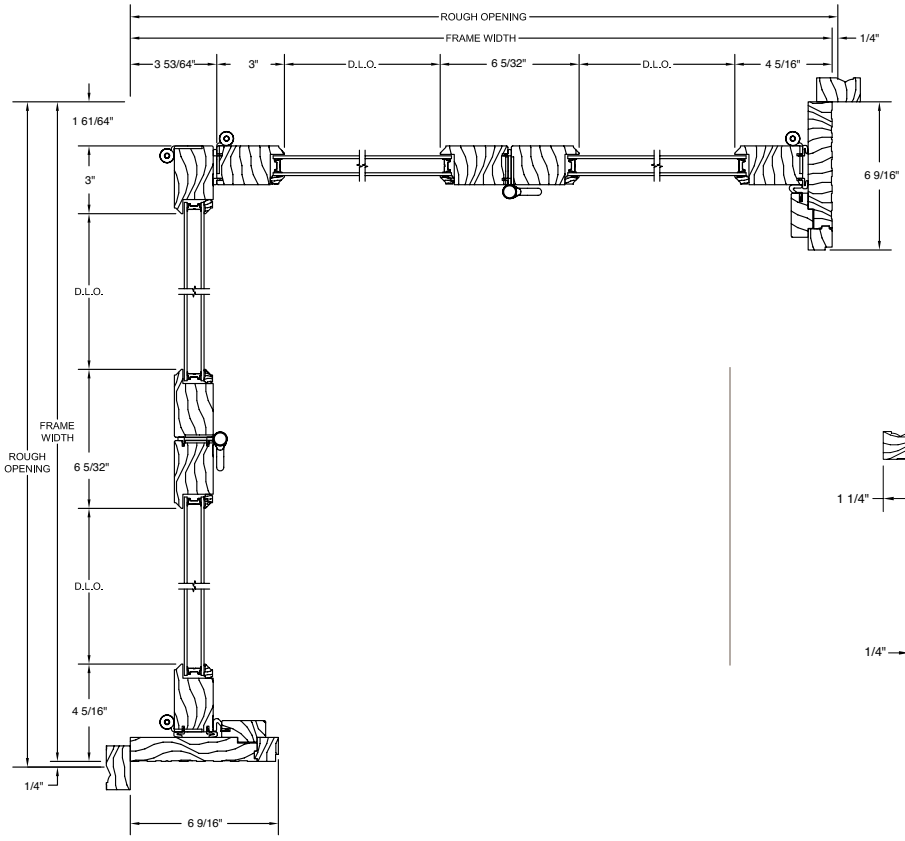

One Wide with Screen

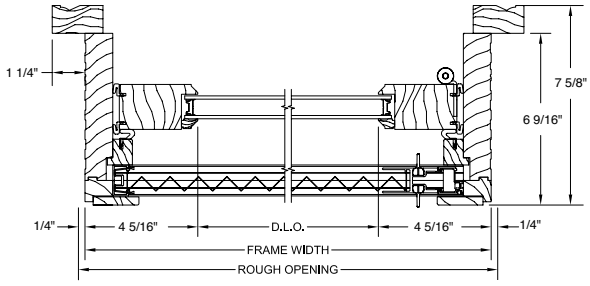

1.75 Panel with Recessed Sill

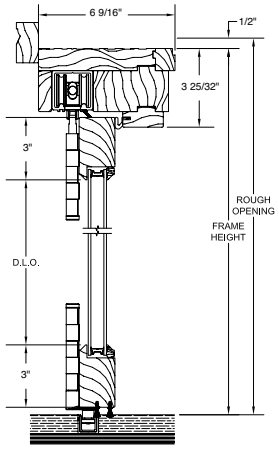

1.75 Panel with Weep Sill

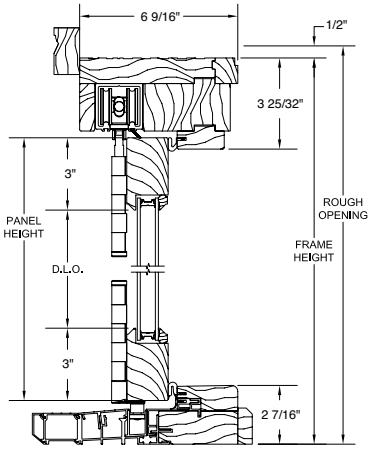

1.75 Panel with Weep Sill and Screen

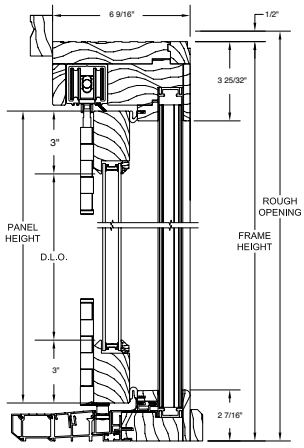

NOTE: Drawings are not to scale. Additional and the most current drawings are available in the Architect Library at www.kolbe-kolbe.com. Corner unit cross section will change when an odd number of panels are used.

Cross Section Drawings

Ultra Series Clad Folding Doors

Four-Wide: Folding One-Way

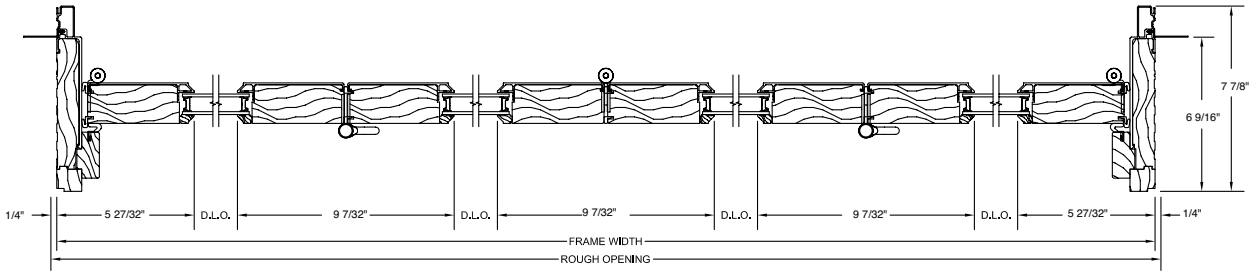

Four-Wide: One Left & Three Right

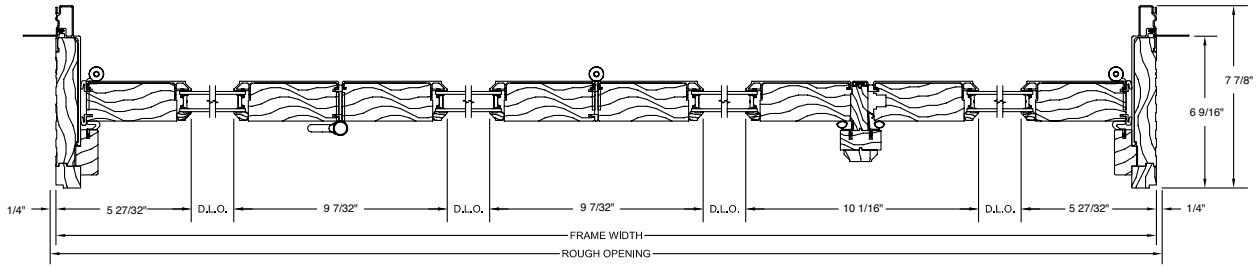

Four-Wide: Two Left & Two Right

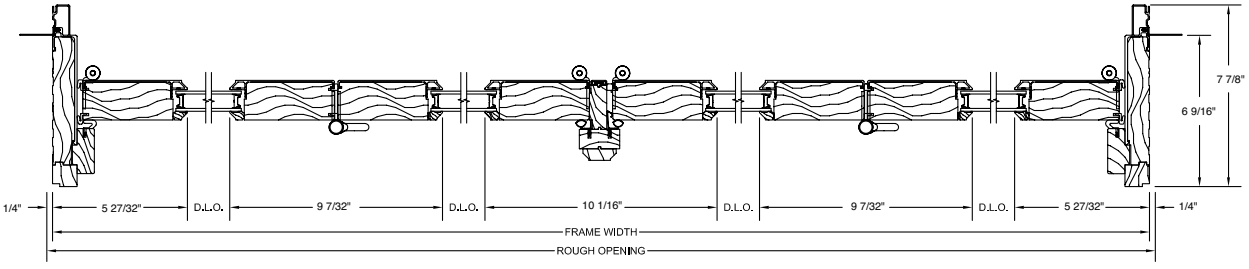

Operation is viewed from the exterior.

NOTE: Drawings are not to scale. Additional and the most current drawings are available in the Architect Library at www.kolbe-kolbe.com.

Ultra Series Clad Folding Doors

Corner Unit

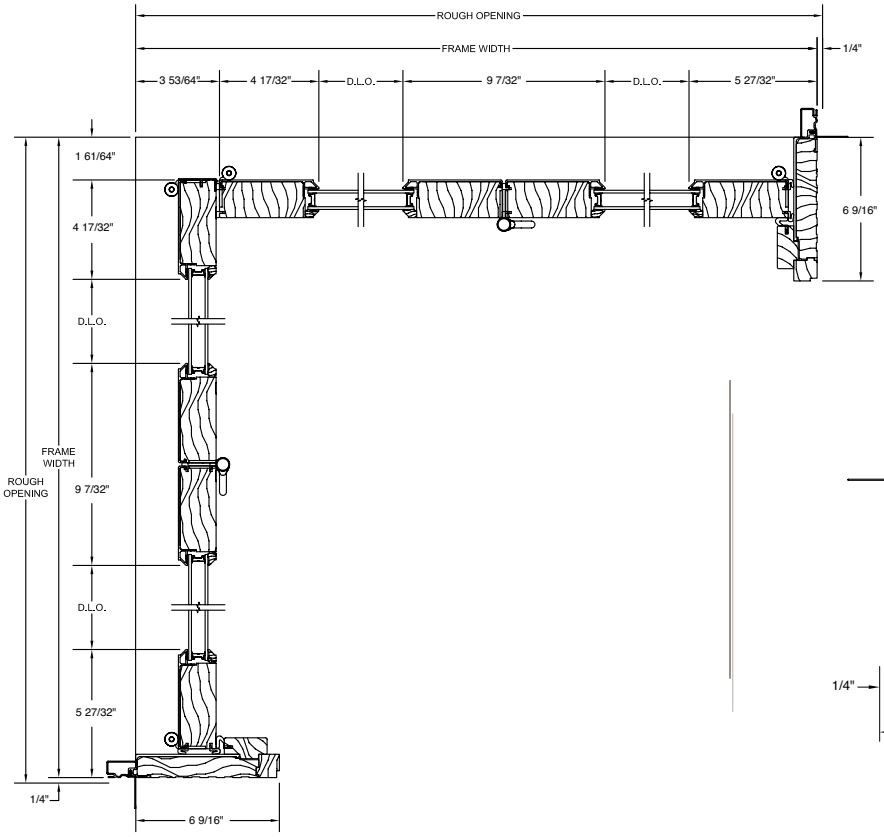

One Wide with Screen

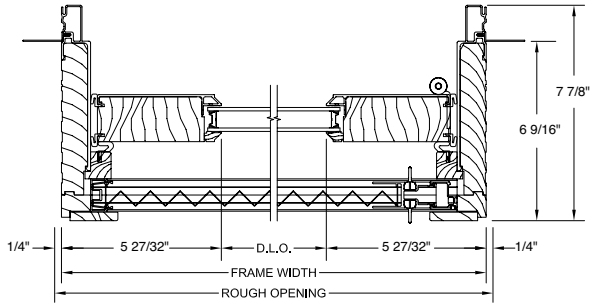

1.75 Panel with Recessed Sill

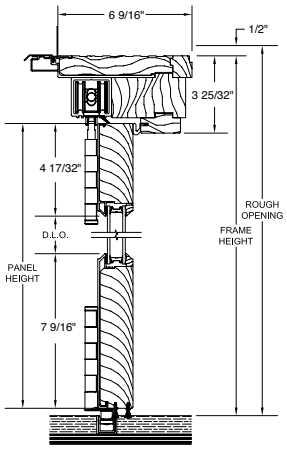

1.75 Panel with Weep Sill

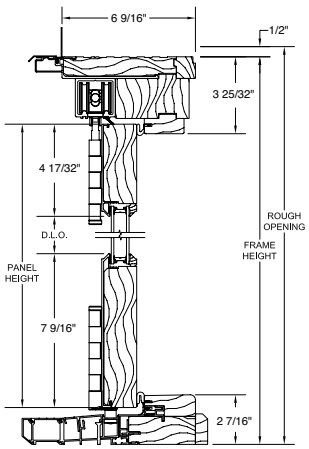

1.75 Panel with Weep Sill and Screen

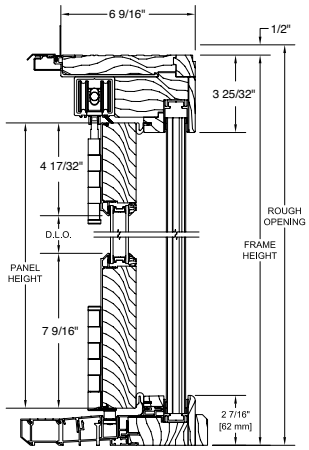

NOTE: Drawings are not to scale. Additional and the most current drawings are available in the Architect Library at www.kolbe-kolbe.com. Corner unit cross section will change when an odd number of panels are used.

Cross Section Drawings

Photo courtesy of The Alexis Agency

Heritage Series Wood Folding Doors

Four-Wide: Folding One-Way

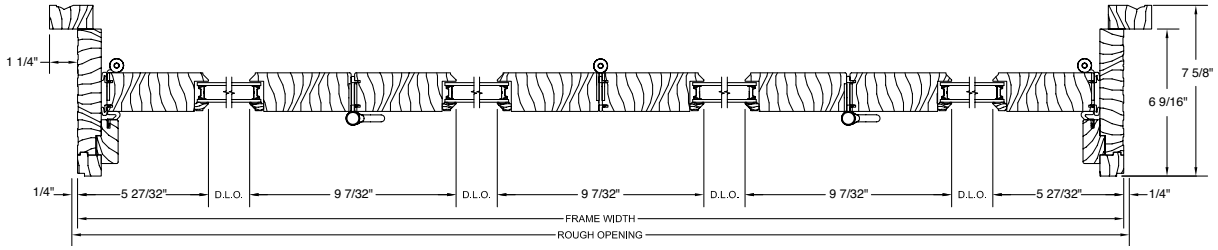

Four-Wide: One Left & Three Right

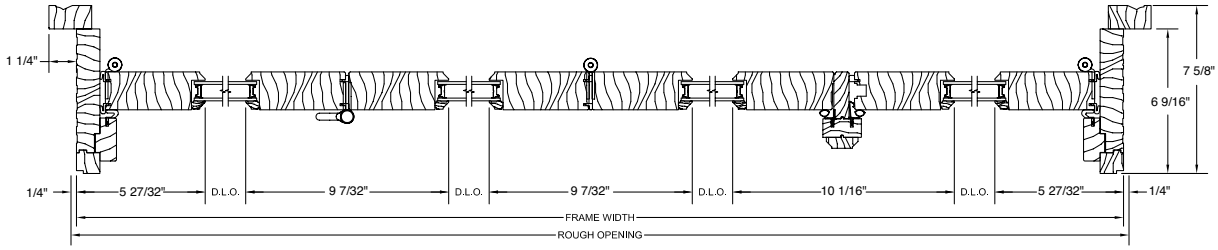

Four-Wide: Two Left & Two Right

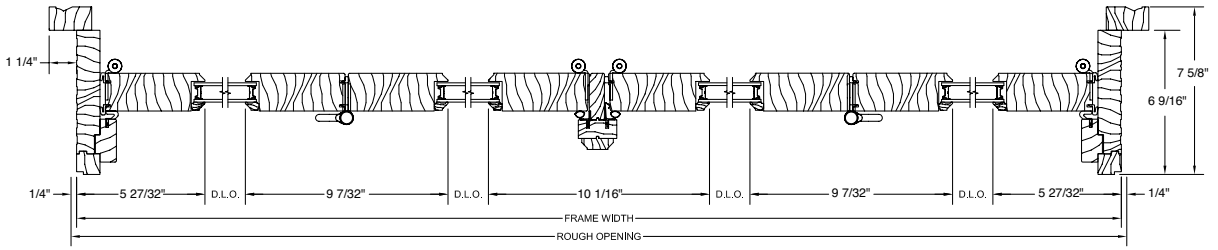

Operation is viewed from the exterior.

NOTE: Drawings are not to scale. Additional and the most current drawings are available in the Architect Library at www.kolbe-kolbe.com.

Heritage Series Wood Folding Doors

Corner Unit

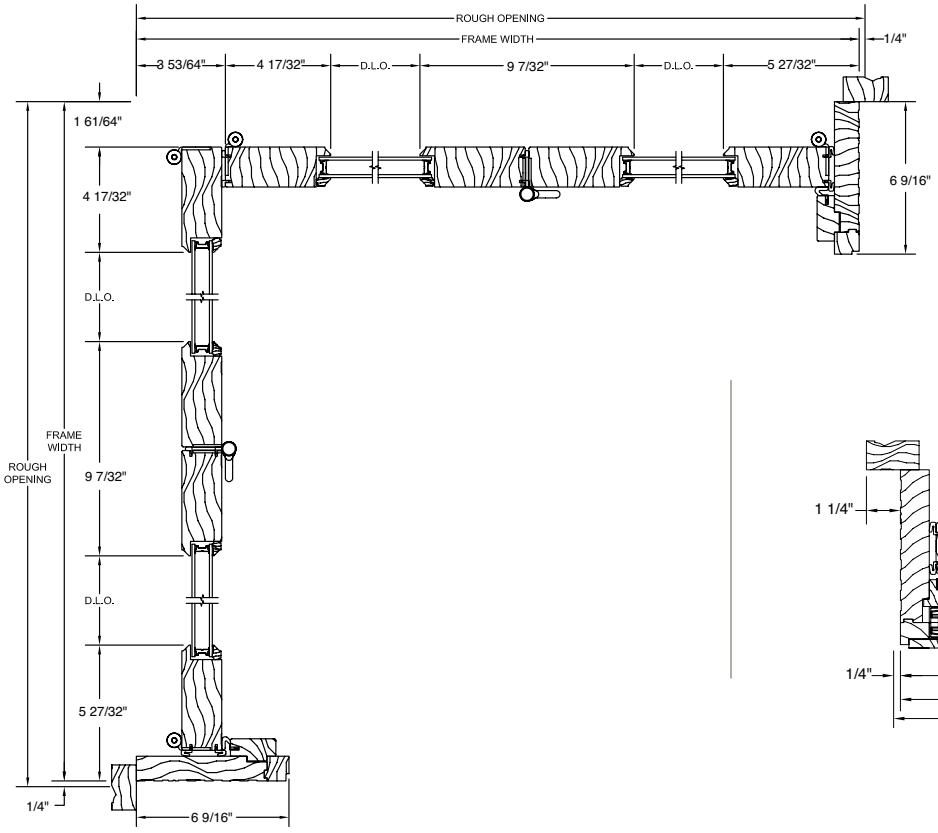

One Wide with Screen

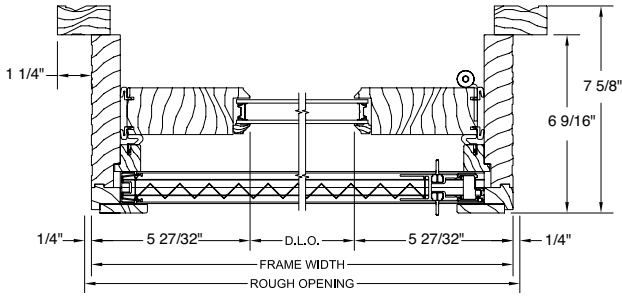

1.75 Panel with Recessed Sill

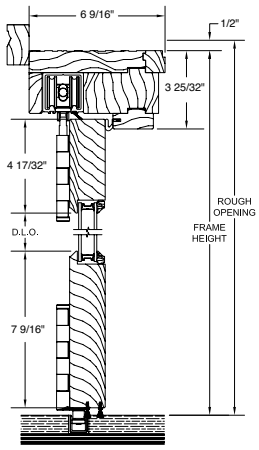

1.75 Panel with Weep Sill

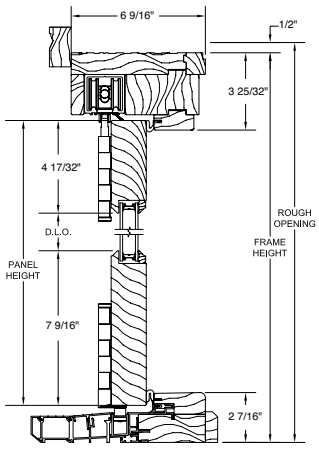

1.75 Panel with Weep Sill and Screen

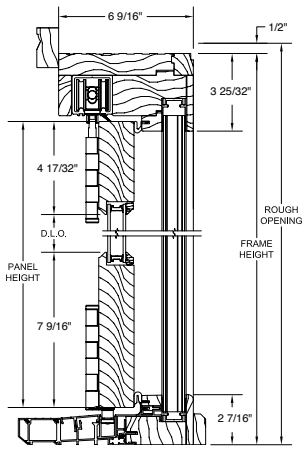

NOTE: Drawings are not to scale. Additional and the most current drawings are available in the Architect Library at www.kolbe-kolbe.com. Corner unit cross section will change when an odd number of panels are used.

Cross Section Drawings

VistaLuxe® Complementary Clad Folding Windows & Doors

Horizontal Section

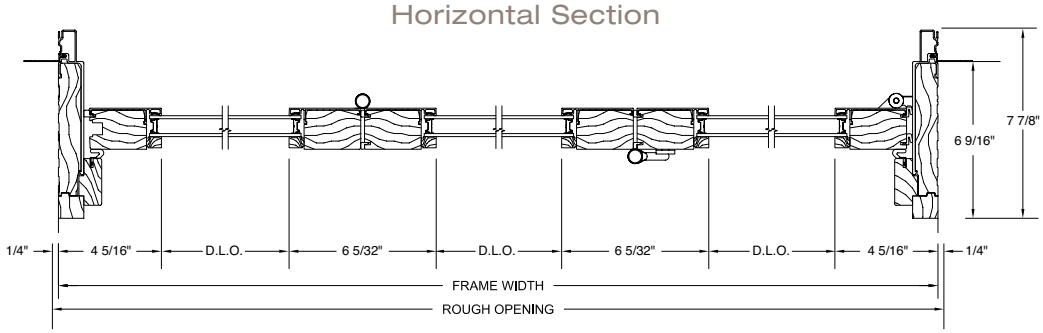

Vertical Section

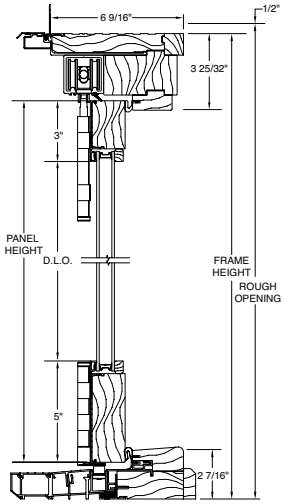

NOTE: Drawings are not to scale. Additional and the most current drawings are available in the Architect Library at www.kolbe-kolbe.com.

Panel Configurations

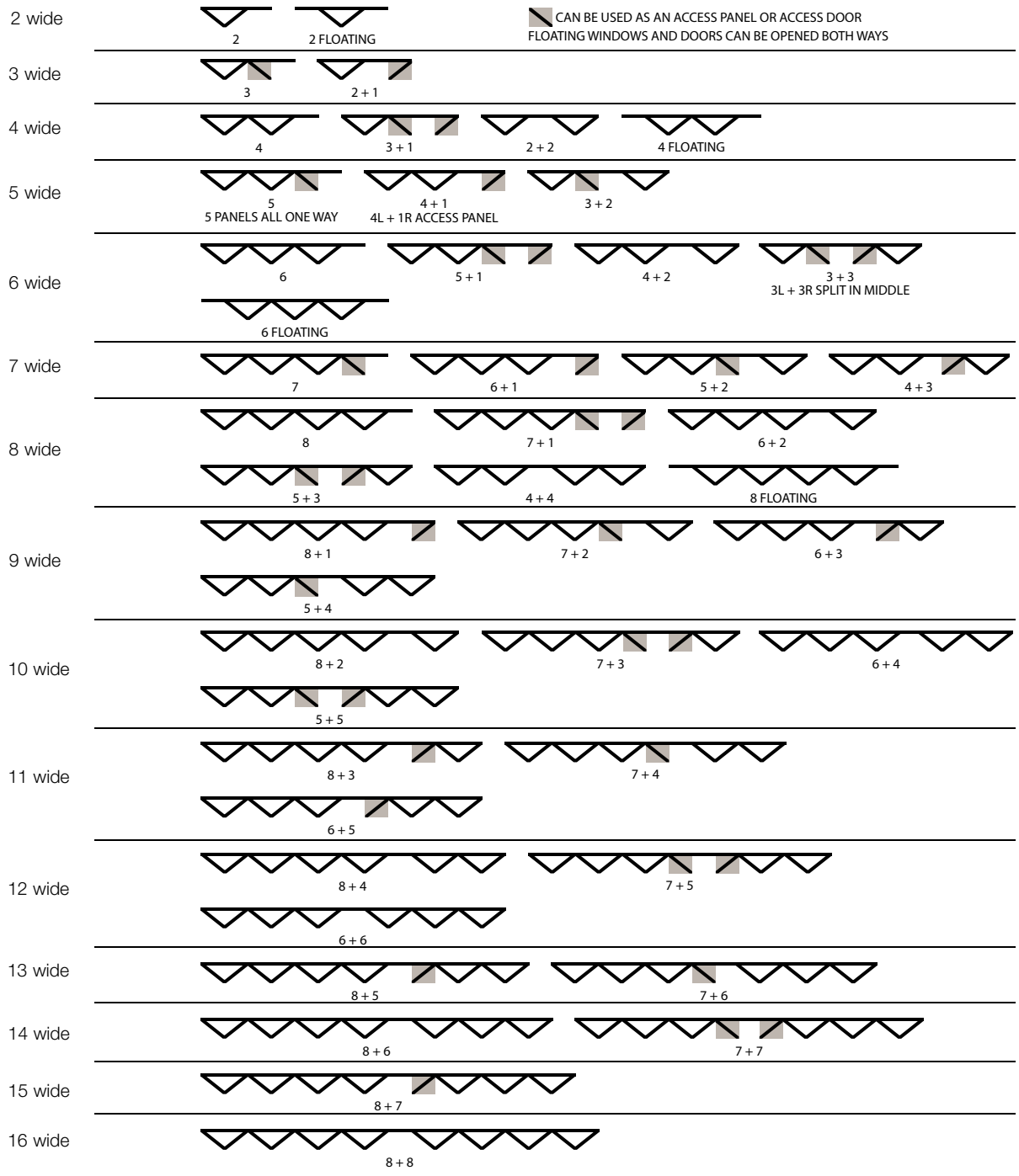

NOTES: Folding windows and doors are shown as outswing operation. The configurations shown above are an overview of what is available. Contact your Kolbe dealer for more information.
There is a maximum of 8 panels per side. The unit width maximum is 52' 6".
Access door configuration will have a swing panel or swing door hinged off of one of the sides of the frame or off of another panel, depending on the configuration chosen. Configurations can be reversed.

For professionals: www.kolbe-kolbe.com
For homeowners: www.kolbewindows.com

KOLBE
WINDOWS & DOORS

1323 S. 11th Avenue | Wausau, WI 54401-5998
715.842.5666

© 2014 Kolbe & Kolbe Millwork Co., Inc. Kolbe & Kolbe Millwork Co., Inc. reserves the right to change specifications without notice. The photography featured herein does not necessarily imply an endorsement of Kolbe products by the property owners. Photography used may not represent current Kolbe product features and options. Top cover photo courtesy of The Alexis Agency. Bottom middle cover photo courtesy of Darlene Halaby Photography. Photos courtesy of © Kenneth M. Wyner photography and architecture by Christopher L. Pattey, Becker Morgan Group unless otherwise noted.

5146780-10M-0914-SPP

Printed on recycled paper